25+ YEARS OF PRODUCTION EXPERIENCE | LENGTH OF WORK 10,000 hours | COMPREHENSIVE RANGE OF MODELS

Keshen 科申

www.keshen.cn



距离温州机场15分钟车程

The factory is 15 minutes' drive away from Wenzhou Airport.

距离地铁S1线双瓯站600米，轻轨直达温州机场和火车温州南站

600 meters away from Shuang'ou Station of Subway Line S1, and the light rail goes directly to Wenzhou Airport and Wenzhou South Railway Station.

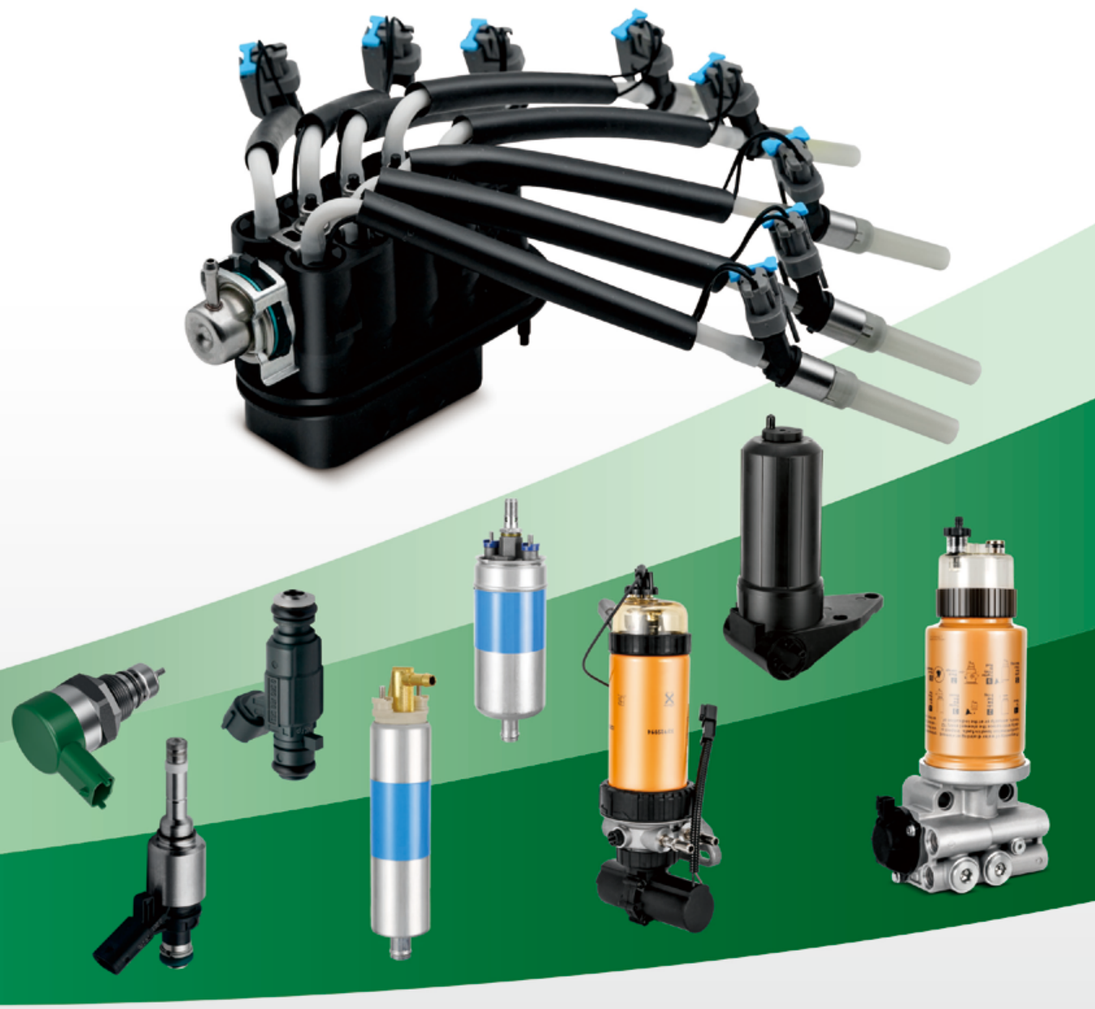

温州科申电机制造有限公司

WENZHOU KESHEN MOTOR MANUFACTURING CO.,LTD.

地址/ADD: 浙江省温州瓯江口产业集聚区昆鹏街道霓荣中路56号安全应急产业园一期12栋
Building 16, Phase I, Safety and Emergency Industrial Park, No. 56, Nirong Middle Road, Kunpeng Street, Oujiangkou Industrial Cluster Zone, Wenzhou, Zhejiang Province

电话/TEL: 0086-577-65371750 **手机/PHONE:** 0086-13967739698 **(wechat&whatsapp)**

网站/WEB: www.keshen.cn **邮箱/E-mail:** lee@keshen.cn 501806228@qq.com

汽油喷油嘴、电动燃油泵、电动柴油输油泵
DRV阀、燃油计量阀、SCV阀、电动刹车真空泵

Gasoline Injector, Electric Fuel Pump, Electric Diesel Lift Pump,
DRV Valve, Fuel Metering Valve, SCV Valve, Electric Brake Vacuum Pump

Keshen 科申

www.keshen.cn

- **汽油喷油嘴**
  Gasoline Injector
- **电动燃油泵**
  Electric Fuel Pump
- **电动柴油输油泵**
  Electric Diesel Lift Pump
- **DRV阀**
  DRV Valve
- **燃油计量阀**
  Fuel Metering Valve
- **SCV阀**
  SCV Valve
- **电动刹车真空泵**
  Electric Brake Vacuum Pump





25+ YEARS OF PRODUCTION EXPERIENCE | LENGTH OF WORK 10,000 hours | COMPREHENSIVE RANGE OF MODELS

Fueling a better life

Keshen科申

www.keshen.cn

国家高新技术企业
NATIONAL HIGH-TECH ENTERPRISE

IATF 16949

温州科申电机制造有限公司，自成立以来，便致力于成为汽车电动泵类和电磁阀类产品领域的佼佼者。公司以"为客户提供优质可靠的产品，同时为全体公司同仁创造物质和精神上的双幸福"为使命，秉持着精密制造的核心竞争力，不断推动产品系列的创新与发展。作为国家高新技术企业，温州科申电机制造有限公司的前身——瑞安市科达汽车配件有限公司，自2001年成立以来，便深耕于汽车电动燃油泵的研究、设计、开发与制造领域。公司凭借领先的技术力量、先进的生产设备、完善的检测手段、可靠的质量标准和灵活的经营机制，赢得了国内外用户的广泛信赖。

在产品开发与设计上，公司始终追求精益求精。目前，公司产品线涵盖了电动汽油泵、电动柴油输油泵、电动刹车真空泵、DRV阀、计量阀等多个领域。其中，公司自主研发的电动柴油泵，以其独特的技术解决了电机在柴油内使用寿命短的问题，寿命长达10000小时，有效解决了国三至国六排放标准的柴油机在寒冷天气下启动困难的问题，并免去了手动排气的繁琐。此外，公司针对涡轮增压汽车、电动汽车及混合动力汽车开发的电动刹车真空泵，以其抽真空速度快、寿命长、稳定性好的特点，赢得了市场的广泛好评。

在电磁阀产品领域，温州科申电机制造有限公司更是投入了大量研发资源。公司已成功开发了DRV阀、燃油计量阀等产品，并计划在未来继续深耕精密制造的阀类产品领域，努力突破精密电磁阀类产品制造上的难点痛点，逐步积累优势，力争成为精密电磁阀类产品的制造专家。

公司现有员工120人，其中技术开发人员占比高达13.3%，这为公司持续的技术创新和产品升级提供了坚实的人才保障。目前，公司已成为新柴、玉柴、一拖、斯太尔、莱动等国内主流主机厂的供应商，与多家知名企业建立了长期稳定的合作关系。

展望未来，温州科申电机制造有限公司将继续秉承"精密制造、不断创新"的企业精神，致力于为全球客户提供更加优质、可靠的产品和服务。同时，公司也将持续关注行业动态和技术发展趋势，不断推动自身技术升级和产品创新，为汽车电动泵类和电磁阀类产品领域的发展贡献更多力量。

Wenzhou Keshen Electric Motor Manufacturing Co., Ltd. has been committed to becoming a leader in the field of automotive electric pump and solenoid valve products since its inception. With the mission of "providing customers with high-quality and reliable products, while creating both material and spiritual happiness for all company colleagues," the company adheres to precision manufacturing as its core competitiveness and continuously promotes the innovation and development of its product series

As a national high-tech enterprise, the predecessor of Wenzhou Keshen Electric Motor Manufacturing Co., Ltd. - Ruian Keda Auto Parts Co., Ltd., has been deeply engaged in the research, design, development, and manufacturing of automotive electric fuel pumps since its establishment in 2001. With leading technical strength, advanced production equipment, perfect testing methods, reliable quality standards, and flexible operating mechanisms, the company has won the trust of domestic and foreign users.

In terms of product development and design, the company always pursues excellence. Currently, the company's product line covers electric gasoline pumps, electric diesel fuel transfer pumps, electric brake vacuum pumps, DRV valves, metering valves, and other fields. Among them, the company's self-developed electric diesel pump, with its unique technology, solves the problem of short service life of motors in diesel fuel, achieving a life span of up to 10,000 hours. This effectively addresses the difficulty of cold starts for diesel engines with emission standards ranging from National III to National VI, eliminating the need for manual exhaust. In addition, the company's electric brake vacuum pump, developed specifically for turbo charged, electric, and hybrid vehicles, boasts fast vacuum pumping, long service life, and excellent stability, winning widespread market acclaim. In the field of solenoid valve products, Wenzhou Keshen Electric Motor Manufacturing Co., Ltd. has invested significant resources in research and development.





11000 m²
工厂面积 FACTORY AREA

12
技术人员 TECHNICAL ENGINEERS

2001
成立日期 ESTABLISHMENT YEAR



SCAN FOR MORE INFO

温州科申电机制造有限公司
WENZHOU KESHEN MOTOR MANUFACTURING CO.,LTD.

专注高价值汽车精密件（技术为核）

FUELING A BETTER LIFE

让每一次精准供油　驱动世界向暖

Keshen科申

www.keshen.cn

IATF 16949

CULTURE



企业愿景 Vision

成为全球信赖的精密技术伙伴，驱动高效、绿色、幸福的未来。

To become a globally trusted precision technology partner, driving an efficient, green, and happy future.

企业使命 Mission

以微米级精度，守护每一次安心出行；

为员工筑幸福成长平台，为客户创超额价值，为社会谋可持续未来。

To safeguard every safe journey with micron-level precision.
To build a platform for employee growth and happiness, to create added value for customers, and to strive for a sustainable future for society.

核心价值观 Values

1. 诚信立企·长期主义

以诚实守诺筑牢合作根基，用长期主义打磨技术与品质。

1. Integrity-Based Enterprise & Long-Term Vision
Building a solid foundation for cooperation with honesty and commitment, refining technology and quality with a long-term vision.

2. 技术为王·突破边界

深耕核心精密制造技术，敢破“卡脖子”难题，不做平庸产品。

2. Technology as King & Breaking Boundaries
Deeply cultivating core precision manufacturing technologies, daring to overcome "bottleneck" problems, and not making mediocre products.

3. 精益求微·品质如金

以微米级精度严控每道工序，让每个配件都经得起市场淬炼。

3. Perfection & Gold-like Quality
Strictly controlling every process with micron-level precision, ensuring that every component can withstand market scrutiny.

4. 共生共赢·价值共享

成就员工成长，赋能客户成功，与产业链伙伴共赴新程。

4. Symbiotic Win-Win, Shared Value
Empowering employee growth, driving customer success, and embarking on a new journey together with industry chain partners.

5. 责任担当·赋能未来

以可靠产品守护出行安全，用绿色智造助力产业可持续。

5. Responsible Commitment, Empowering the Future
Safeguarding travel safety with reliable products and promoting industrial sustainability through green and intelligent manufacturing.

PRODUCTION ABILITY 生产能力

传统电动燃油泵在柴油发动机中的使用寿命往往不足200小时，而我司匠心打造的科申牌电动柴油泵，则以其卓越的性能脱颖而出，寿命可延长至5000至10000小时，吸程高达10米，极大地优化了柴油发动机的冷启动表现，特别是在严寒的冬季，它能显著加快柴油供给速度，是符合国三、国四、国五及国六排放标准的柴油发动机的理想之选。

The service life of traditional electric fuel pumps in diesel engines is often less than 200 hours, while our craftsmanship to create the KESHEN brand electric diesel pumps, stand out with its excellent performance, the life of the pump can be extended to 5000 to 10000 hours, suction range up to 10 meters, which greatly optimizes the performance of the diesel engine's cold start, especially in the cold winter, it can significantly accelerate the speed of diesel fuel supply, and it is the ideal choice in line with the It is ideal for diesel engines complying with National III, National IV, National V and National VI emission standards.

相比于传统燃油泵 COMPARED TO CONVENTIONAL FUEL PUMPS

5000–10000 Hour

更长的使用寿命 LIFE EXTENSION TIME












R&D 实验与研发

科申电动柴油泵采用滚柱泵技术，通过高速旋转产生强大的吸力，确保柴油在油路中的顺畅流动。在寒冷季节，柴油易变得粘稠，流动性减弱，甚至因空气侵入而形成气阻，阻塞从油箱至发动机的油路。此时，科申电动泵便展现出其无可比拟的优势，确保油路的畅通无阻。特别是当油箱位置较低或油路较长时，其效果更为显著。此外，随着发动机使用时间的延长，滤清器的堵塞及油路上的污垢沉积会增加油路阻力，而科申电动泵的强大吸力则能有效克服这些阻力，减少因柴油流动不畅而引发的故障。

安装科申电动柴油泵后，用户可选用标号较低的柴油，如冬季由原本的20号柴油降为10号柴油，从而节省燃油费用。便捷维护：更换滤清器后，传统方式需手动排气，耗时费力。而科申电动泵则能在几秒内完成此过程，极大提高了维护效率。

KESHEN electric diesel pump adopts roller pump technology, which generates strong suction force through high-speed rotation to ensure the smooth flow of diesel in the fuel line. In the cold season, diesel fuel is easy to become viscous, liquidity is weakened, and even due to air intrusion and the formation of air resistance, blocking the fuel line from the fuel tank to the engine. At this time, KESHEN electric pump will show its unparalleled advantages to ensure the smooth flow of fuel. Especially when the fuel tank position is low or the fuel line is long, its effect is more significant. In addition, with the prolonged use of the engine, the clogging of the filter and the dirt deposits on the fuel line will increase the resistance of the fuel line, and the strong suction power of the KESHEN electric pump can effectively overcome these resistances and reduce the failure caused by the poor flow of diesel fuel.
After installing the KESHEN electric diesel pump, the user can choose a lower standard diesel fuel, such as winter from the original 20 diesel fuel down to 10 diesel fuel, so as to save fuel costs. Convenient maintenance: After replacing the filter, the traditional way is to manually exhaust the air, which is time-consuming and laborious. The electric pump can complete the process in a few seconds, which greatly improves the maintenance efficiency.





99.98%
QUALIFIED PRODUCTS

INCOMING INSPECTION

- Material inspection
- Components inspection

PRODUCTION INSPECTION

- Work following the instructions
- Routing inspection

FINAL INSPECTION

- Quantity inspection
- Appearance inspection

DELIVERY INSPECTION

- Packing & Customers special request inspection

GASOLINE FUEL INJECTOR 汽油喷油器（汽油喷油嘴）

- Automobile Intake Manifold Fuel Injector
- Motorcycle Fuel Injector
- Automobile GDI Fuel Injector
- 汽车进气管燃油喷油器
- 摩托车燃油喷油器
- 汽车GDI燃油喷油器

- **高端定位：** 聚焦高端市场，以“打造行业一流产品”为核心目标。
- **精密制造：** 配备全球顶尖生产与测试设备，搭建无尘生产环境；微米级的高精度加工设备，极致把控制造精度。
- **技术领先：** 依托成熟核心技术，是企业未来重点深耕的战略方向，彰显高端智造实力。

- **HIGH-END POSITIONING:**
  Focus on the high-end market, with "building first-class products in the industry" as the core goal.
- **PRECISION MANUFACTURING:**
  Equipped with world-class production and testing equipment, and built a dust-free production environment; micron-level high-precision processing equipment to strictly control manufacturing accuracy.
- **TECHNOLOGICALLY LEADING:**
  Relying on mature core technologies, it is a strategic direction for the enterprise to focus on in the future, demonstrating high-end intelligent manufacturing strength.

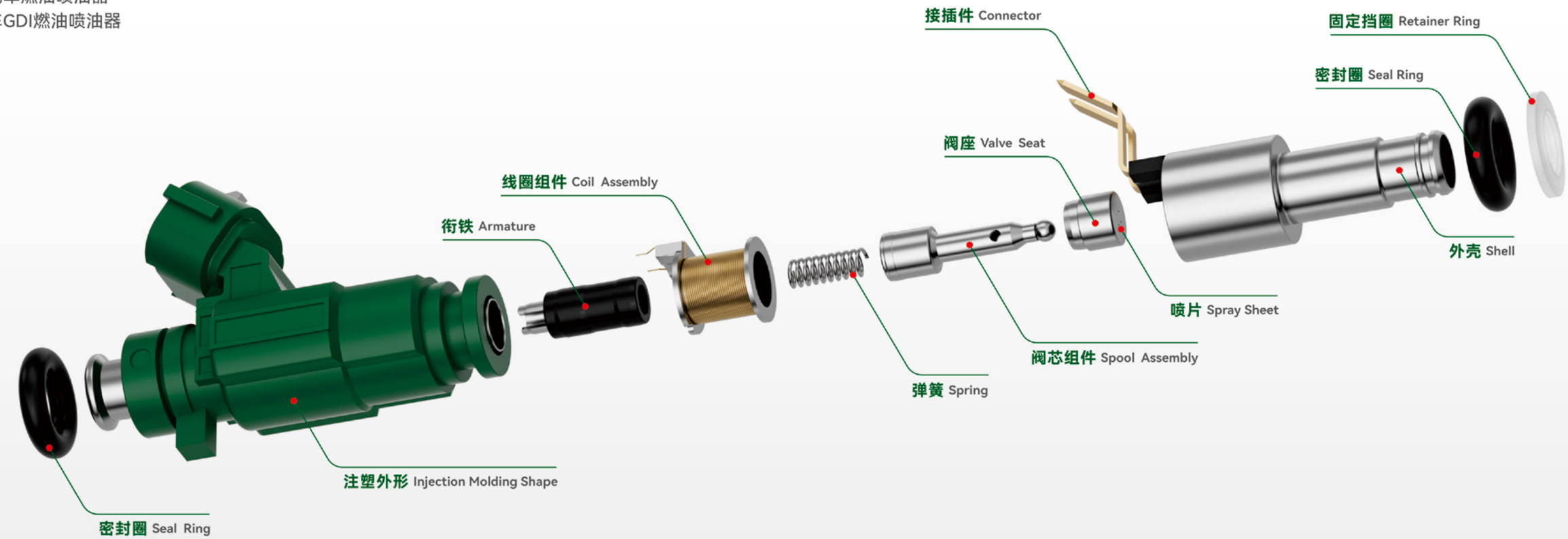



MFI-V8A



SL1001



SM303



SL3005



SH001



SL7001

IATF 16949

进气道喷油器 / INTAKE MANIFOLD INJECTOR

SL1001



CROSS REFERENCE

BOSCH:
0280156412
06G906031B

APPLICATION
大众途安宝来明锐 L

SL1002



CROSS REFERENCE

BOSCH:
0280156144
030906031T
030133319AF

APPLICATION
大众 Gol 1.0 8V

SL1003



CROSS REFERENCE

BOSCH:
0280155968
9202100
M-9593-F302

APPLICATION
雪佛兰、庞蒂亚克、福特、沃尔沃

SL1004



CROSS REFERENCE

BOSCH:
0280155710
F6VE-A5A
F6VZ-9F593-AA
CM-4809 FJ78

APPLICATION
福特林肯 Mercury 4.6L 6.8L V8

SL1005



CROSS REFERENCE

BOSCH:
0280155934
53031740AA
812-12132
81212132

APPLICATION
道奇达科他杜兰戈公羊

SL1006



CROSS REFERENCE

BOSCH:
35310-2G100
FJ1082
L050 1d 250

APPLICATION
起亚现代

SL1007



CROSS REFERENCE

BOSCH:
35310-2E000
353102E100

APPLICATION
起亚现代

SL1008



CROSS REFERENCE

BOSCH:
0280156070
06B133551N

APPLICATION
大众帕萨特 1.8T 奥迪 A4 A6

SL1009



CROSS REFERENCE

BOSCH:
0280156131
12571159
2171552

APPLICATION
2004-2008 凯迪拉克 CTS SRX 3.6L V6

SL1010



CROSS REFERENCE

BOSCH:
FBJE100
0009603
16600-AA500

APPLICATION
日产 PrimeraV6

SL1011



CROSS REFERENCE

BOSCH:
35310-3C400

APPLICATION
2011-2016 起亚索兰托 3.5L V6

SL1012



CROSS REFERENCE

BOSCH:
0280156019
23209-0D030
23250-0D030

APPLICATION
丰田 卡罗拉 Auris ZZE150 Avensis

SL1013



CROSS REFERENCE

BOSCH:
0280156257
06B906031G

APPLICATION
for Volkswagen Passat Santana

SL1014



CROSS REFERENCE

BOSCH:
35310-25100
L055 1d 149

APPLICATION
起亚现代

进气道喷油器 / INTAKE MANIFOLD INJECTOR

SL2001



CROSS REFERENCE

BOSCH:
13537546244
1427240

APPLICATION

宝马 3 系列 323i(1977-2012)
5 系列 520i(1972-2023)

SL2002



CROSS REFERENCE

BOSCH:
23250-74100
23209-74100

APPLICATION

丰田凯美瑞 Celica Solara RV4 2.0L 2.2L

SL2003



CROSS REFERENCE

BOSCH:
23250-15030

APPLICATION

1991-1995 丰田卡罗拉
AE100 卡里纳 AT192 5AFE

SL3001



CROSS REFERENCE

BOSCH:
7G9N-AC
30777502
062009021

APPLICATION

11-13 年沃尔沃 S60 S 60 T6 69K AWD
3.0L V6

SL3005



CROSS REFERENCE

BOSCH:
23209-31050
23250-31050

APPLICATION

丰田亚洲龙 凯美瑞 汉兰达
RAV4 Sienna Venza 3.5L V6

SL3008



CROSS REFERENCE

BOSCH:
23250-22040

APPLICATION

丰田 Avensis Celica Mr2 花冠 1.8

SL3009



CROSS REFERENCE

BOSCH:
297500-0540
15710-64J00

APPLICATION

Suzuki Jimny Liana Swift Sx4 1.3 1.6
2005-2014

SL3010



CROSS REFERENCE

BOSCH:
15710-62L00

APPLICATION

SL3011



CROSS REFERENCE

BOSCH:
15710-61J00

APPLICATION

SL4001



CROSS REFERENCE

BOSCH:
23250-22030
23209-22030

APPLICATION

2000-2003 丰田 Celica Matrix 1.8L I4

SL4003



CROSS REFERENCE

BOSCH:
2325062040
23209-62040
FJ585
1580561

APPLICATION

Tacoma Tundra 4 Runner 3.4L

SL4004



CROSS REFERENCE

BOSCH:
23250-20020
23250-0A010
23209-20020
23209-0A010

APPLICATION

丰田凯美瑞汉兰达 / 亚洲龙雷克萨斯
ES300 3.0L

SL7006



CROSS REFERENCE

BOSCH:
028015840B

APPLICATION

MFI-V6A



CROSS REFERENCE

BOSCH:
12568332、19210688、89060439、
17114164、25331863、17113295、
17113215、17115379、17113673、
2204-510881、322-04819、800-1512N、
217-3028、217-3348、16-9706、
2204510881、32204819、8001512N、
2173028、2173348、169706、
FJ10565、4G1887、M1045、
FJ503、63885、FJ10565-11B1、
BWD63885、240408FJ503 Spider

喷油器 *4.3 Vortec*：
19210688、12568332、88894353；

燃油喷射器电机：17113273；

替换：
FJ503、FJ10565、FJ10565-11B1、
BWD63885、4G1887、63885、
217-3028、2173028、25331863、
240408、217-3252、2173252、
2173348、217-3348、2204510881、
89060439、833-22102-6、800-1512N、
17113295、17114164、17113673、
17091628、17115379、322-04819、
16-9706、169706

APPLICATION

雪佛兰 1996-2006 4.3L V6 皮卡

MFI-V8A



CROSS REFERENCE

BOSCH:
25340347、17114163、FJ10566
89060440、25340347、17114163
17115381、2173029、93441235
FJ10566、4G1888、63886、
FJ105、FJ504、833-22105-8,
833221058, 833-22102-8,
833221028, 800-1513N, 8001513N,
M1046, 217-3029, 2173029

APPLICATION

雪佛兰 1996-2006 4.3L V6 皮卡

SL1016



CROSS REFERENCE

BOSCH:
35310-37150
9260930004
FJ660 842-12255

APPLICATION

SL1018



CROSS REFERENCE

BOSCH:
0280156065
06B133551M

APPLICATION

SL1019



CROSS REFERENCE

BOSCH:
9650764780
0280156034

APPLICATION

SL1020



CROSS REFERENCE

BOSCH:
'0280156318

APPLICATION

SL1021



CROSS REFERENCE

BOSCH:
0280156007
04861454AA

APPLICATION

SL1022



CROSS REFERENCE

BOSCH:
F01R00M073

APPLICATION

SL1024



CROSS REFERENCE

BOSCH:
'0280156364

APPLICATION

DIESEL FILTER SOLENOID VALVE

SL3012



CROSS REFERENCE

BOSCH:
23209-79155

APPLICATION

SL3013



CROSS REFERENCE

BOSCH:
23209-39075

APPLICATION

SL3014



CROSS REFERENCE

BOSCH:
23250-50040

APPLICATION

SL3015



CROSS REFERENCE

BOSCH:
23250-0C020

APPLICATION

SL3016



CROSS REFERENCE

BOSCH:
23209-09045

APPLICATION

SL3017



CROSS REFERENCE

BOSCH:
23290-39075

APPLICATION

SL3018



CROSS REFERENCE

BOSCH:
23250-22090

APPLICATION

SL6005



CROSS REFERENCE

BOSCH:
25377439

APPLICATION

SL6006



CROSS REFERENCE

BOSCH:
35310-3C000

APPLICATION

SL7007



CROSS REFERENCE

BOSCH:
FBY2850
FIJ0026
50S3601
16600-EN200

APPLICATION

SL9001



CROSS REFERENCE

BOSCH:
01F002A
0280156357

APPLICATION

SL9101



CROSS REFERENCE

BOSCH:
16600-1KT0A FJ1192

APPLICATION

SH001



CROSS REFERENCE

BOSCH:
0261500278

APPLICATION

SH002



CROSS REFERENCE

APPLICATION

SH003



CROSS REFERENCE

BOSCH:
0261500350

APPLICATION

SH004



CROSS REFERENCE

BOSCH:
0261500073

APPLICATION

SH005



CROSS REFERENCE

BOSCH:
0261500805

APPLICATION

SH006



CROSS REFERENCE

BOSCH:
0261500155

APPLICATION

SH007



CROSS REFERENCE

BOSCH:
23250-0P090

APPLICATION

摩托喷油嘴 | MOTORCYCLE FUEL INJECTOR

IATF 16949

SH008



CROSS REFERENCE

BOSCH:
21R AN0170 08004 05834

APPLICATION

SH009



CROSS REFERENCE

BOSCH:
35310-04AA0

APPLICATION

SH010



CROSS REFERENCE

BOSCH:
0261500090
16600 1VA0A

APPLICATION

SH011



CROSS REFERENCE

BOSCH:
164505LAA01

APPLICATION

SH012



CROSS REFERENCE

BOSCH:
21R AN0170 08002 12180

APPLICATION

SH013



CROSS REFERENCE

BOSCH:
23250-F0010

APPLICATION

SH014



CROSS REFERENCE

BOSCH:
3100-N6G8E
04U12 03409

APPLICATION

SH015



CROSS REFERENCE

BOSCH:
PE01132500

APPLICATION

MF1-01



CROSS REFERENCE

APPLICATION

SM101



CROSS REFERENCE

BOSCH:
MEV1-038-A

APPLICATION

SM102



CROSS REFERENCE

BOSCH:
MEV1-030

APPLICATION
DIESEL FILTER SOLENOID VALVE

SM103



CROSS REFERENCE

BOSCH:
MEV7-060

APPLICATION

SM104



CROSS REFERENCE

BOSCH:
MEV7-060

APPLICATION

SM105



CROSS REFERENCE

BOSCH:
MEV7-030

APPLICATION

SM106



CROSS REFERENCE

BOSCH:
MEV7-128

APPLICATION

SM107



CROSS REFERENCE

BOSCH:
MEV1-150-A

APPLICATION

SM109

CROSS REFERENCE

BOSCH:
MEV1-248



APPLICATION

SM110

CROSS REFERENCE

BOSCH:
MEV1-080-B



APPLICATION

SM201

CROSS REFERENCE

BOSCH:
CEV3081A



APPLICATION

SM202

CROSS REFERENCE

BOSCH:
MEV15-020
10G-10B



APPLICATION

SM203

CROSS REFERENCE

BOSCH:
MEV15-001-A
10G-06



APPLICATION

SM204

CROSS REFERENCE

BOSCH:
MEV15-004-A
10G-09B



APPLICATION

SM205

CROSS REFERENCE

BOSCH:
CEV20-022



APPLICATION

SM206

CROSS REFERENCE

BOSCH:
MEV14-182



APPLICATION

SM301

CROSS REFERENCE

BOSCH:
BT-A



APPLICATION

SM302

CROSS REFERENCE

BOSCH:
BT-B



APPLICATION

SM303

CROSS REFERENCE

BOSCH:
BT-C



APPLICATION

SM304

CROSS REFERENCE

BOSCH:
黑壳 C 型短款



APPLICATION

AUTOMOTIVE DRV VALVE 汽车DRV阀（新锐产品）

DRV阀是柴油高压共轨的压力调节阀，主要由线圈、铁芯（或衔铁芯）、阀体及控制电路等部件组成。当DRV阀未通电时，线圈中没有电流通过，因此不会产生磁场，阀座和阀体之间的通道打开，轨压不能形成。线圈通电的时候，产生磁场，磁场吸引衔铁芯移动，将阀体的通道封住，使得燃油无法流通或流通量很小，从而导致轨压上升。阀座孔打开的程度直接决定了油轨内压力的大小。通过这种方式，DRV阀可以实现对燃油压力的精确控制。

The DRV valve is a pressure regulating valve for diesel high-pressure common rail, mainly composed of a coil, an iron core (or armature core), a valve body, and a control circuit. When the DRV valve is not energized, there is no current flowing through the coil, so no magnetic field is generated, and the channel between the valve seat and the valve body is open, preventing the rail pressure from forming. When the coil is energized, it generates a magnetic field that attracts the armature core to move, sealing the channel of the valve body, making it impossible or difficult for fuel to flow, thereby causing the rail pressure to rise. The degree of opening of the valve seat hole directly determines the pressure inside the fuel rail. In this way, the DRV valve can achieve precise control of fuel pressure.

- **对标顶尖：**参照世界一流工厂性能标准，严格遵循核心性能曲线研发。
- **精准可控：**摒弃粗放生产，严控性能参数，规避行业常见偏差问题。

- **BENCHMARKING TOP STANDARDS:**
  Developed in strict accordance with the core performance curves with reference to the performance standards of world-class factories.
- **PRECISELY CONTROLLABLE:**
  Abandon extensive production, strictly control performance parameters, and avoid common deviation problems in the industry.

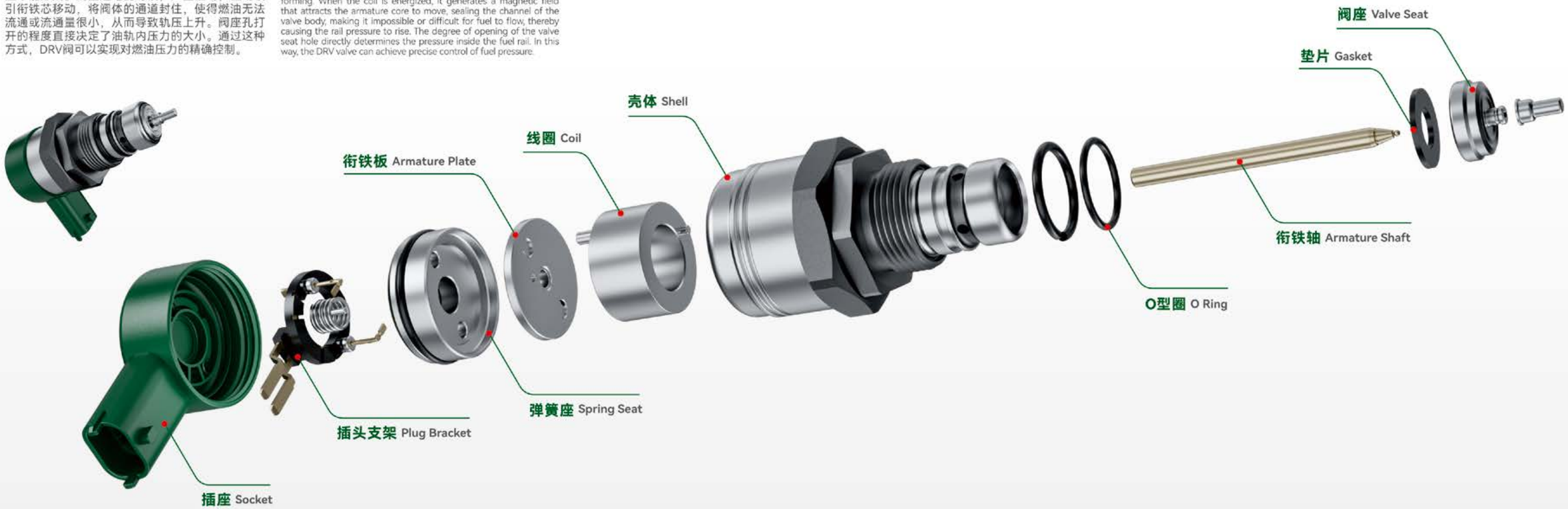



DRV2



DRV3



DRV5



DRV9

DRV2



CROSS REFERENCE

0281002698
0281002943

APPLICATION

奔驰

DRV3



CROSS REFERENCE

0281002507
0281006032
0281007983
0281006246

APPLICATION

DRV5



CROSS REFERENCE

BOSCH:
0281006074

APPLICATION

DRV9



CROSS REFERENCE

0281006744

APPLICATION

DRV10



CROSS REFERENCE

28249292

APPLICATION

DRV11



CROSS REFERENCE

F00N210196 24-02-16 0009

APPLICATION

FUEL METERING & SCV VALVE 燃油计量阀&SCV阀

燃油计量阀，又称为进油计量单元比例阀，通常安装在高压油泵的进油侧。该阀由ECU（电子控制单元）通过发送精确的信号进行控制，当ECU发出控制信号，电流通过燃油计量阀的线圈时，线圈内部会产生强大的电磁场。这个电磁场吸引阀芯（或衔铁芯）向阀座方向移动，从而改变阀体与阀座之间的通道面积。阀芯的移动程度决定了通道的开度，也即决定了进入高压油泵柱塞腔的燃油量。通过调整燃油计量阀的开度，ECU能够精确控制进入高压油泵的燃油量，进而调节共轨管内的燃油压力，使其保持在设定的稳定范围内。这种精密的控制机制确保了发动机在不同工况下都能获得恰到好处的燃油供应，提高了燃油利用率，降低了排放，并优化了发动机的性能和效率。

The fuel metering valve, also known as the proportional fuel inlet metering unit valve, is typically installed on the fuel inlet side of the high-pressure fuel pump. This valve is controlled by the ECU (Electronic Control Unit) through precise signal transmission.When the ECU sends a control signal, current flows through the coil of the fuel metering valve, generating a powerful electromagnetic field inside the coil. This electromagnetic field attracts the valve core (or armature core) towards the valve seat, thereby altering the channel area between the valve body and the valve seat. The extent of valve core movement determines the opening of the channel, which in turn determines the amount of fuel entering the plunger chamber of the high-pressure fuel pump.By adjusting the opening of the fuel metering valve, the ECU can precisely control the amount of fuel entering the high-pressure fuel pump, subsequently regulating the fuel pressure within the common rail, maintaining it within a predetermined stable range.This sophisticated control mechanism ensures that the engine receives the optimal amount of fuel supply under varying operating conditions, enhancing fuel efficiency, reducing emissions, and optimizing engine performance and efficiency.

- **全链保障：** 拥有完备产业链，生产链路成熟高效。
- **稳定精准：** 性能长期可靠，确保精准运行。

- **FULL-CHAIN GUARANTEE:**
  Possess a complete industrial chain with mature and efficient production links.
- **STABLE AND ACCURATE:**
  Long-term reliable performance ensuring precise operation.

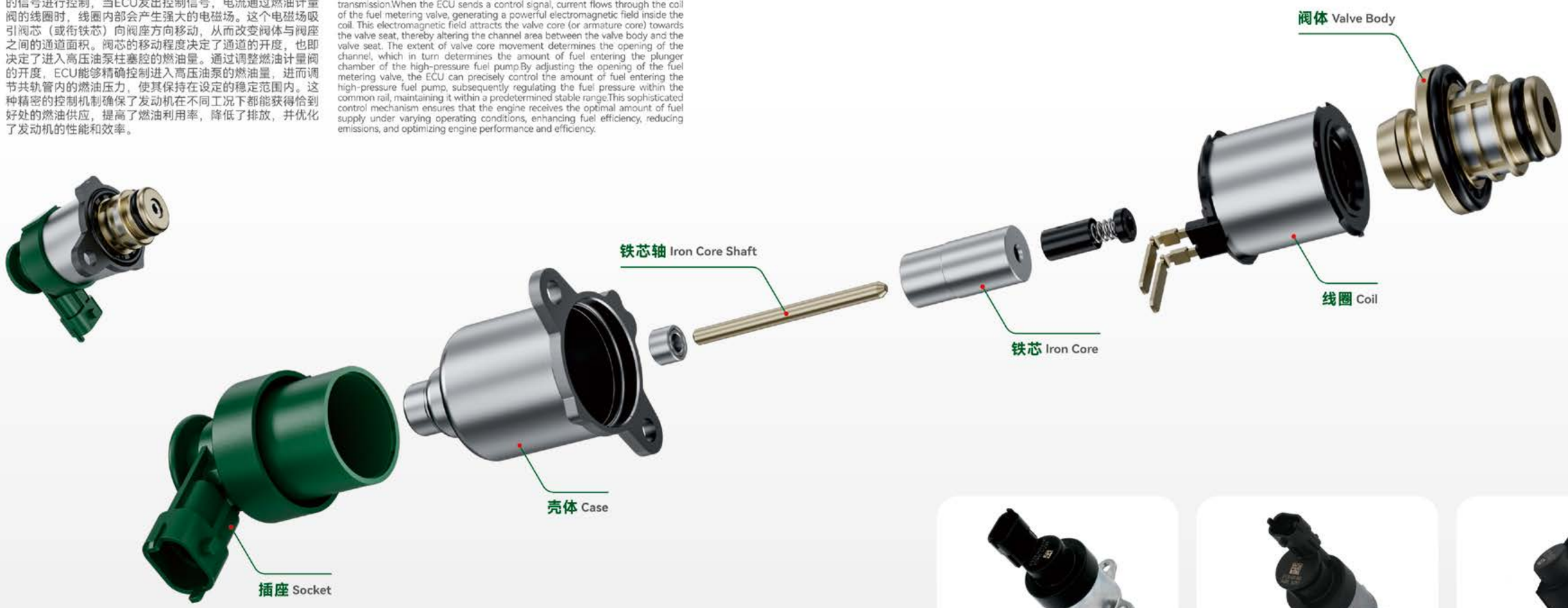

MV1

MV14A



MV1W



MV6A



MV6



MV5



MV14



MV4



MV2

MV1



CROSS REFERENCE

0928400745,0928400617
0928400689,0928400640
0928400746,0928400660
0928400644,0928400726
0928400646,0928400772
0928400774,0928400713
0928400712

APPLICATION

MV1W



CROSS REFERENCE

0928400802,0928400607
0928400653,0928400673
0928400680,0928400741
0928400742,0928400743

APPLICATION

CITROEN 1.6HDI,FORD,1.6TDCIAZDA2,3
PEUGOTSUZUKICHAI4FA
2.7116KWYNN4
D30TCI3.029KW FAW 201 2.2,54 KW

MV2



CROSS REFERENCE

294200-0360,1460A037
294009-0260,6C1Q9358AB
96655-23380,LR009837
1920. QK,A6860-VMO9A

APPLICATION

MITSUBISHI L200 2.5,DIESEL
SUZU D-MAX3.0 DIESE
FORD TRANSIT MK7，2.212.4/3.21
FRAT，DUCATO 100，MULTIJET2.2D

MV4



CROSS REFERENCE

294009-0120

APPLICATION

MV5



CROSS REFERENCE

294200-2960
1460A062
1460A439

APPLICATION

MITSUBISHI,TRITON,
LANCERMIRAGE 4N13 4N15 CUMMINS

MV6



CROSS REFERENCE

096710-0120

APPLICATION

MV6A



CROSS REFERENCE

096710-0130

APPLICATION

MV14



CROSS REFERENCE

0928400820,0928400818
0928400779,0928400756
0928400836,0928400757
0928400821,0928400815

APPLICATION

CPIH YUCHAI 4F920RF,968849996806
96606,167001056RTROEN BERLINGO
C3C41.6 DACIA DOKKER,FIAT SCUDO
1.6 FORDESTA VI1.6TDCIFORDANSIT
COURIER 1.5 TDCI

MV14A



CROSS REFERENCE

0928400752,0928400800

APPLICATION

XYV001



CROSS REFERENCE

BOSCH:
8-98032549-0(0281)

APPLICATION

XYV002



CROSS REFERENCE

BOSCH:
0196515

APPLICATION

XYV003



CROSS REFERENCE

BOSCH:
0706515

APPLICATION

XYV004



CROSS REFERENCE

BOSCH:
0707515

APPLICATION

XYV005



CROSS REFERENCE

BOSCH:
0708515

APPLICATION

XYV006



CROSS REFERENCE

BOSCH:
1025515

APPLICATION

XYV007



CROSS REFERENCE

BOSCH:
1026515

APPLICATION

XYV008



CROSS REFERENCE

BOSCH:
1028515

APPLICATION

XYV009



CROSS REFERENCE

BOSCH:
F062515

APPLICATION

XYV010



CROSS REFERENCE

BOSCH:
F082515

APPLICATION

ELECTRIC DIESEL LIFT PUMP 电动柴油输油泵

摒除手动操作繁琐：科申电动柴油泵彻底替代了手动压泵，省去了繁琐的手动排气步骤，既快捷又省心，为用户带来了前所未有的便捷体验。强化冷启动能力：凭借其卓越的吸力与快速的供油能力，科申泵有效解决了柴油发动机在低温环境下启动困难的问题，显著提升了发动机的工作稳定性和可靠性。

Eliminate the manual operation of cumbersome: KESHEN electric diesel pump completely replaced the manual pressure pump, eliminating the cumbersome manual exhaust steps, both fast and hassle-free, for the user to bring an unprecedented convenient experience. Strengthen the cold start ability: With its excellent suction power and fast oil supply ability, KESHEN pump effectively solves the problem of diesel engine starting difficulty in low temperature environment, which significantly improves the engine's working stability and reliability.





- **超长寿命：** 有刷产品使用寿命显著优于行业均值，耐用性优势突出。
- **核心技术：** 自主掌控换向器材质与结构关键技术，保障产品稳定性能。

- **ULTRA-LONG SERVICE LIFE:**
  The service life of brushed products is significantly better than the industry average, with outstanding durability.
- **CORE TECHNOLOGY:**
  Independently master the key technologies of commutator material and structure to ensure stable product performance.

- Consistent Fuel Delivery
- Quieter operation
- Improved fuel efficiency
- Longer lifespan
- Better engine performance

电动柴油输油泵 | ELECTRIC DIESEL LIFT PUMP

KS52B

CROSS REFERENCE

2641A203,MF4225449M1



APPLICATION

BENZ MERCEDES

KS60

CROSS REFERENCE

580464075,0580464096,
0580456084, 0580464073,
1S7U9350DA, 1S7U9A407DA,
XS7U9350AA, 500314007



APPLICATION

IVECO;OPEL;FORD

KS67D

CROSS REFERENCE



APPLICATION

PERKINS

KS82

CROSS REFERENCE

4132A016.4132A015,
4132A018.ULPK0039,
ULPK0038.4226937M91



APPLICATION

PERKINS

KS82A

CROSS REFERENCE

ULPK0038,4226937M91,4132A016
4132A015,ULPK0039



APPLICATION

PERKINS

KS82B

CROSS REFERENCE

4132A014,4132A018,ULPK0038
4226937M91,3681816M2



APPLICATION

PERKINS

KS82C

CROSS REFERENCE

ULPK0040



APPLICATION

PERKINS

KS82D

CROSS REFERENCE

ULPK0041,4132A014M1
446-1895,299-9265,4677011



APPLICATION

PERKINS

KS82F

CROSS REFERENCE



APPLICATION

PERKINS

KS114 铝座

CROSS REFERENCE

371-3599 190-8970
217-8339,FH599



APPLICATION

FOR CATERPILLAR , 工程机械车
PERKINS

KS114B 铝座

CROSS REFERENCE

371-3602,217-8339



APPLICATION

FORD, JEE, POPEL

KS114 总成

CROSS REFERENCE

190-8970,190-8977
326-1644,212-3657



APPLICATION

FOR,CATERPILLAR, 工程机械车

KS114B 总成

CROSS REFERENCE

390-4679



APPLICATION

CATERPILLAR, 工程机械车

KS116

CROSS REFERENCE

5260634
5260632
39868188
39868187
3968190
4944735
4937766



APPLICATION

CUMMINS FUEL LIFT
TRANSFER PUMP

KS116B

CROSS REFERENCE

4975617



APPLICATION

KS117

CROSS REFERENCE

228-9129 349-1063
249-7669 349-5327



APPLICATION

CATERPILLAR BACKHOE LOADERS
414E 416D 416E 420D 420E 432E
434E 444E 422E 424D 428D 428E
432D

KS117B

CROSS REFERENCE

87802238,87802202
87802331,87801285



APPLICATION

FOR JOHN DEERE

KS117C

CROSS REFERENCE

RE505825,RE509530
RE569926,RE569927



APPLICATION

FOR JOHN DEERE

KS156 铝座

CROSS REFERENCE

446-5408(12v) ,446-5409(24v)



APPLICATION

KS166

CROSS REFERENCE

509-5694 523-4987
552-1669 434-3928 596-0354



APPLICATION

CATERPILLAR

KS168

CROSS REFERENCE

4465411 4465412 T417502



APPLICATION

CATERPILLAR

KS117ZA

CROSS REFERENCE

32/925994



APPLICATION

KS117ZB

CROSS REFERENCE

228-9129,349-1063,361-9554



APPLICATION

KS117ZC

CROSS REFERENCE

228-9130



APPLICATION

KS117ZD

CROSS REFERENCE

37-4089



APPLICATION

KS117ZE

CROSS REFERENCE

MP-10326



APPLICATION

KS117ZF

CROSS REFERENCE

32/925694



APPLICATION

KS56

CROSS REFERENCE



APPLICATION

FORD DIESEL LIFT PUMP,
水寒宝一代电动泵，PL420

KS56B

CROSS REFERENCE

E2340(高压），E2519(低压）
E2340,PFP58529,E1066,
E2340



APPLICATION

FORD DIESEL LIFT PUMP

KS56 铝座

CROSS REFERENCE



APPLICATION

PL420 总成

KS56 总成

CROSS REFERENCE

柴油加热器
加热自动栗油寒宝
PI420 自动泵滤座加热油寒宝



APPLICATION

柴，皮轻卡，哈弗，江铃越野

KS67F

CROSS REFERENCE



APPLICATION

KS69

CROSS REFERENCE



APPLICATION

DIESEL LIFT PUMP

KS76

CROSS REFERENCE



APPLICATION

DIESEL,LIFT,PUMP, 水寒宝二代电动泵

KS76 铝座

CROSS REFERENCE

4310



APPLICATION

CATERPILLAR,CAT

KS114

CROSS REFERENCE

PE977,162-2211



APPLICATION

CATERPILLAR,CAT

KS111B

CROSS REFERENCE

ZSD550



APPLICATION

KS112

CROSS REFERENCE



APPLICATION

DIESEL PUMP

KS113

CROSS REFERENCE

1110-10900D-2(12V) 1110-10900D-3(24V)



APPLICATION

DIESEL PUMP

KS117ZG

CROSS REFERENCE

138-3100



APPLICATION

KS117ZH

CROSS REFERENCE

156-1200



APPLICATION

KS119

CROSS REFERENCE



APPLICATION

KS119D

CROSS REFERENCE



APPLICATION

解放 J6 双杯

KS119E

CROSS REFERENCE



APPLICATION

亿利大炮，2007

KS121B

CROSS REFERENCE

4D27G31-27100A,4D27G31-27200A
进油口：
10mm
出油口：
8mm



APPLICATION

新柴 XINCHAI，合力叉车

KS121

CROSS REFERENCE

4D27G31-27100,4D27G31-27200
进油口：
8.8mm
出油口：
8mm



APPLICATION

新柴，杭叉 XINCHAI

KS122

CROSS REFERENCE

INSJ100-1006100A



APPLICATION

KS156

CROSS REFERENCE



APPLICATION

电动柴油输油泵 | ELECTRIC DIESEL LIFT PUMP

KS122C



CROSS REFERENCE

4M5U-T73.670100
1NSJ00-1106100A

APPLICATION

KS128



CROSS REFERENCE

A50900-1106100C
A51000-1106100C
带时间控制器电动泵

APPLICATION

KS129



CROSS REFERENCE

APPLICATION

潍柴

KS129 铝座



CROSS REFERENCE

APPLICATION

潍柴铝座

KS128B



CROSS REFERENCE

4A3LU-T.670100
4N5LRP-M52.670100-1FE (24V)
进油口：
12mm
出油口：
12mm

APPLICATION

KS128C



CROSS REFERENCE

4N5RP-T40.670100B (12V)
进油口：
12mm
出油口：
12mm

APPLICATION

KS129 总成



CROSS REFERENCE

APPLICATION

东风 潍柴

KS131



CROSS REFERENCE

APPLICATION

油路增压泵 ,DIESEL LIFT PUMP

KS128D



CROSS REFERENCE

4N5RP-T40.670100

APPLICATION

KS132



CROSS REFERENCE

53016

APPLICATION

福田康明斯 ,CUMMINS. 欧曼 ,GLB

KS134



CROSS REFERENCE

53040,FS20190

APPLICATION

福田欧曼 , 弗列加 FH21219

KS128E



CROSS REFERENCE

4V5RP-T73.670100

APPLICATION

KS128F



CROSS REFERENCE

4V5RP-T73.670100A (24V)

APPLICATION

KS133



CROSS REFERENCE

C3000-1106100SF1

APPLICATION

玉柴大型发电机组增压泵 ,YUCHA
富康 50136 电动泵，, 大型柴油发动机组，
船用发动机组，, 应急发动机组

KS135A

CROSS REFERENCE

20090,36277



APPLICATION

新款玉柴

KS135A 铝座

CROSS REFERENCE



APPLICATION

新款玉柴

KS135B

CROSS REFERENCE



APPLICATION

东风 重汽

KS135B 铝座

CROSS REFERENCE



APPLICATION

KS138

CROSS REFERENCE



APPLICATION

2 插 潍柴

KS138 铝座

CROSS REFERENCE



APPLICATION

潍柴

KS138B

CROSS REFERENCE

6A3LR-T5,330360



APPLICATION

潍柴，一拖东方红，3 插（ ECU）

KS138B 铝座

CROSS REFERENCE



APPLICATION

东方红

KS139

CROSS REFERENCE



APPLICATION

陕汽德龙

KS139 铝座

CROSS REFERENCE

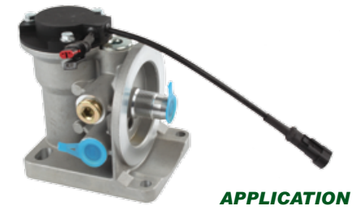

APPLICATION

陕汽 X3000，潍柴水寒宝，
柴油加热器总成

KS139B

CROSS REFERENCE



APPLICATION

红岩杰狮电动泵

KS139B 铝座

CROSS REFERENCE



APPLICATION

红岩杰狮

KS142

CROSS REFERENCE



APPLICATION

1000FG 带电动泵铝座

KS142 总成

CROSS REFERENCE



APPLICATION

1000FG 带电动泵总成
1000FG WITH ELECTRIC LIFT PUMP

KS145

CROSS REFERENCE



APPLICATION

1000FG 专用泵
EXTERNAL SPECIAL ELECTRIC LIFT PUMP FOR 1000FG

KS153

CROSS REFERENCE

4HK1/B



APPLICATION

油路增加泵可直接取代 4HK,6HK

ELECTRIC FUEL PUMP 电动汽油泵（始于2001年）

25年专注燃油泵泵芯研发生产 | 全场景定制+零失效品质保障。

深耕燃油泵泵芯领域25载，我们以专业积淀与技术突破，覆盖摩托车、汽车、航空等全场景应用，打造从叶轮泵到滚柱泵、从小尺寸精密件到大尺寸重载件的全系列产品矩阵。

无论是满足日常通勤的普通规格，还是适配赛车极限工况的高性能定制，亦或是航空级严苛标准的特种泵芯，我们均能根据客户的性能参数、结构要求灵活定制，实现“一客一方案”的精准适配。

25年生产经验赋予我们对燃油泵泵芯的深度认知，通过成熟的FMEA风险管控体系与全流程品质检测，提前规避潜在失效模式，从原材料选型到成品出厂的每一道工序都严格把关，确保交付给客户的每一款产品都具备稳定可靠的品质，成为全行业信赖的泵芯定制专家。

25 Years Focused on Fuel Pump Core R&D & Production | Full-Scenario Customization + Zero-Failure Quality Assurance

With 25 years of profound experience in fuel pump core manufacturing, we have achieved technological breakthroughs and professional accumulation, covering full-scenario applications including motorcycles, automobiles, and aviation. We have built a comprehensive product portfolio ranging from impeller pumps to roller pumps, and from small-size precision components to large-size heavy-duty parts.

Whether it is the standard specifications for daily commuting, high-performance customization for extreme racing conditions, or special pump cores meeting strict aviation-grade standards, we can flexibly customize products according to customers' performance parameters and structural requirements, realizing precise adaptation of "one customer, one solution".

Our 25 years of production experience has endowed us with in-depth knowledge of fuel pump cores. Through a mature FMEA risk control system and full-process quality inspection, we proactively avoid potential failure modes. Every process from raw material selection to finished product delivery is strictly controlled, ensuring that each product delivered to customers possesses stable and reliable quality, making us a trusted pump core customization expert across the industry.

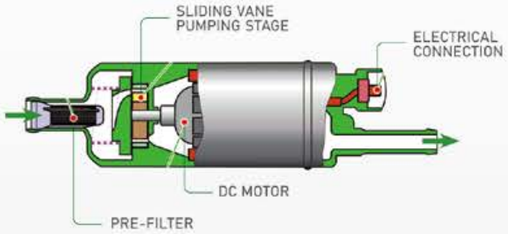









- **稳定可靠：** 依托大批量标准化生产，筑牢质量根基。
- **全面适配：** 泵芯型号全覆盖，满足多元需求；品质管控体系成熟，输出稳定。
- **STABLE AND RELIABLE:**
  Relying on mass standardized production to lay a solid foundation for quality.
- **FULLY ADAPTABLE:**
  Full coverage of pump core models to meet diverse needs; mature quality control system ensuring stable output.



- Quieter operation
- Improved fuel efficiency
- Consistent Fuel Delivery
- Better engine performance
- Longer lifespan

电动燃油泵 | ELECTRIC FUEL PUMP

KS01



CROSS REFERENCE

VDO:
E22041,047-993,763011,
9850004,993-763-011Z,
763011Z, E22 041 047Z,
E22-041-029Z
V.W:
1H0906091.3A5919051L

APPLICATION
VW,SEAT,FORD

KS01D



CROSS REFERENCE

1H0 906 091 D

APPLICATION
VW

KS02



CROSS REFERENCE

AIRTEX:
E2068.E8335
AC DELCO:
EP432,EP2019H
BOSCH:
0580453427,0580453465
0580453471,0581454001
DELPHI:
FE0150

APPLICATION
FORD，JEEP，OPEL

KS02B



CROSS REFERENCE

BOSCH:
0580453482,0580453481,0580453471

APPLICATION
NISSAN,HONDA

KS02C



CROSS REFERENCE

BOSCH:
0580454035，0580453606
0580453412，0580453465
2112-1139010，815037

APPLICATION
LADA

KS03



CROSS REFERENCE

96143350,96180403,96180483,
96350078,96351494

APPLICATION
DAEWOO

KS04



CROSS REFERENCE

AIRTEX:
E8254
HYUNDAI:
31111-28300.E8229,E8240,E8213,E3305
HONDA:
17040 S04 LOO,17040S10A01
HYUNDAI:
3111028100,3111123300
ISUZU:
8944794182,8970418763,31111-25000

APPLICATION
ISUZU,MAZDA, HYUNDAI,HONDA

KS05



CROSS REFERENCE

ISUZU:
5862022350,8943845281,
8944794181,8970418761
MAZDA:
B3C713350.B3E713350
B3E713350A.B3E71335ZB,
TOYOTA:
5862022350,8943845281

APPLICATION
MAZDA,HONDA

KS06



CROSS REFERENCE

TOYOTA:
23221-16490, 23220-0C010,
23221 -46010
HONDA:
17040SZ331, 17040SZ3A32

APPLICATION
TOYOTA, HONDA

KS07



CROSS REFERENCE

BOSCH:
0580453407,0580453408,0580453428
AIRTEX:
E8229,E2019,
HYUNDAI:
31111-22000,31111-28150
31110-28100,31111-37200
ISUZU:5-86202-235-0
MAZDA:
B3C7-13-350,B3E7-13-350
B3E7-13-350A,B3E7-13-35ZB

APPLICATION
HYUNDAI, MAZDA,HONDA,NISSAN,
MITISUBISH

KS07B



CROSS REFERENCE

0580453477,E8335.EP488

APPLICATION
MAZDA

KS07C



CROSS REFERENCE

15100-61AA0,15100-50G00
15100-50G00,15100-58B00
15100-58B10,15100-60G00,
15100-60G20,4762964,
4798941,52018390,E2158
E2471,E7154,E8229

APPLICATION
MAZDA,ISUZU,HYUNDAI,HONDA
TOYOTANISSAN,SUZUKI

KS08



CROSS REFERENCE

23221-46060,23221-50010,
0986580000,0986580030,
23221-50060,23221-46120,
23221-74110,23221-62010
E8382

APPLICATION
TOYOTA

KS09



CROSS REFERENCE

AIRTEX:
E8240,23221-46060,23221-46120,
23221 -50060,23221 -62010,
23221-74110,23221-46060,
23221-46120, 23221 -50060,
23221 -62010,

APPLICATION
TOYOTA

KS10A



CROSS REFERENCE

AIRTEX:
E10221
PEUGEOT:
152546,152575,6025304880,6025315873
DELPHI:
FE0219
VOLVO:
30864216
WALBRO:
ERJ197.ERJ237

APPLICATION
PEUGEOT,RENAULT,ROVER,VOLVO,
CHRYSLER

KS10B



CROSS REFERENCE

WALBRO:
ESS382.CA206
MARELLI:
MSS070-21,77471,
170.00,MSS070,MSS0702
AIRTEX:
E10228.E10521
CHRYSLER:
83502751
FIAT:
7747117,46473397

APPLICATION
DODGE,CHRYSLER,PEUGEOT,
RENAULT,PLYMOUTH

电动燃油泵 | ELECTRIC FUEL PUMP

KS10D



CROSS REFERENCE

AC DELCO:
EP7123,AIRTEX,E7049
WALBRO:
GRJ429

APPLICATION

DODGE

KS11



CROSS REFERENCE

BOSCH:
0580305001,0580305006
AIRTEX:
E10222,E10223,E10224 E10225,
E10226,E10227
FIAT:
46427686-46831950,
77500715-46831949
SIDAT: 70037 70038

APPLICATION

PEUGEOT,RENAULT,ROVER, FIAT,
CHRYSLER

KS12



CROSS REFERENCE

DAEWOO:
AM-06-ST
BOSCH:
0580453465,815037

APPLICATION

DAEWOO

KS12B



CROSS REFERENCE

OE:
31115-26900

APPLICATION

KS12C



CROSS REFERENCE

13579065

APPLICATION

CHEVROLET

KS13



CROSS REFERENCE

BOSCH:
0580453477, 0580453477
WALBRO:
GCA3350, GSS3348,GSS 191

APPLICATION

DAEWOO

KS13B



CROSS REFERENCE

17042-8H301

APPLICATION

KS14



CROSS REFERENCE

BOSCH:
F000TE1713,F000TE1714
AIRTEX:
E2254,E2157,E2333,E3210
CHEVROLET:25116525
LEXUS:
23220- 03020,23221-0D010
23221- 15050
TOYOTA:
23220-74021,23221-03010

APPLICATION

FORD

KS14B



CROSS REFERENCE

AIRTEX:
KLG4-13-350A
KEM:
269-E

APPLICATION

FORD

KS14C



CROSS REFERENCE

AIRTEX:
E2226.FE0321

APPLICATION

FORD

KS14D



CROSS REFERENCE

AC DELCO:
EP2039H.MU2019
DELPHI:
EF0319,EF0321, E2226

APPLICATION

FORD

KS14E



CROSS REFERENCE

APPLICATION

FORD, JEE, POPEL

KS14F



CROSS REFERENCE

APPLICATION

FORD

KS14G



CROSS REFERENCE

E2284

APPLICATION

FORD

KS14H



CROSS REFERENCE

FTAUAIA:
1106355

APPLICATION

FORD

KS15



CROSS REFERENCE

AIRTEX:
E2111
DELPHI:
FE0318
SUZUKI:
15100-61A02.15100-57B01
15100-57B10,15100-57B20
15100-80C01,15100-80C02

APPLICATION

FORD

电动燃油泵 | ELECTRIC FUEL PUMP

KS16



CROSS REFERENCE

AIRTEX:
3031,E3210,E3212,E3240,E3265,
E3270,E3271
ACDELCO:
EP189,EP207, EP236,EP240,EP241,
EP243, EP244,EP267,EP277,EP313,
EP329
DELPHI:
FE0039.FE0040, FE0080,FE0102,
FE0112

APPLICATION

BUICK,CHEVROLET,BUICK ,PONTIAC,
CADILLAC

KS16B



CROSS REFERENCE

AIRTEX:
E3211,E3313
AC DELCO:
EP268.EP270, EP306,EP330,
DELPHI:
FE0041,FE0047,FE0114,FE0116

APPLICATION

BUICK,CHEVROLET,BUICK,PONTIAC,
CADILLAC

KS16C



CROSS REFERENCE

AIRTEX:
E3919M,E3924M
AC DELCO:
EP240R

APPLICATION

BUICK,REGAL.GM,
CHEVROLETPONTIAC, CADILLAC,FORD

KS16D



LENGTH: 63MM

CROSS REFERENCE

AIRTEX:
E3240,E3265,E3270,E3212,E3904,E3906
GM:
25116525

APPLICATION

BUICK,GM,CHEVROLETPONTIAC

KS17



CROSS REFERENCE

AIRTEX:
E8023 E8272,23220-16190
69407I69140,SP1129,P72090,
EP293,EP425,23220-43070

APPLICATION

ACURA,MAZDA,TOYOTA, HONDA,
SUZUKI,NISSAN

KS17B



CROSS REFERENCE

AIRTEX:
E3285,E8255
DELPHI:
FE0144,FE0146
SUZUKI:
15100-61B00,15100-61B03,15100-61BT0
TOYOTA:2
3221-42130,23221-50010,
23221 -50020,23221 -74010

APPLICATION

HONDA,ISUZU,NISSAN,
SUZUKI,TOYOTA

KS19



CROSS REFERENCE

AIRTEX:
E3901,E8224,E3268,E3791
AC ELCO:
EP336,EP383,EP384
DELPHI:
FE0003
KEM:
EFP8186

APPLICATION

BUICK,CADILLAC,CHEVROLET,PONTIAC

KS19B



CROSS REFERENCE

AIRTEX:
E3902.E3268
OPEL:
815008
AC DELCO:
EP382,EP386,EP387
WALBRO:
5CA401
CHEVROLET:
6472358,6472370,6472374,
6472377,6472421,6472311

APPLICATION

OPEL,BUICK,CADILLAC, CHEVROLET

KS21



CROSS REFERENCE

AIRTEX:
E2044,E7000,E7012,E7018,
E7071H,E7074H,E2003,E2008,
E2035,E3024,E3027
HYUNDAI:
31110-23010,31110-33100
31111-23001
DELPHI:
FE0053,FE0079,FE0094,FE0107
FE0123,FE0141,FE0142,FE0148
FE0202.FE02

APPLICATION

HYUNDAI

KS22A



CROSS REFERENCE

SUZUKI:
15110-63B00,4029416025229
UCT-02S

APPLICATION

MITSUBISHI,SUZUKI

KS22C



CROSS REFERENCE

15110-63B01

APPLICATION

MITSUBISHI

KS23A



CROSS REFERENCE

OE:
7555130,7799543,71737902
AIRTEX:
E1113
BOSCH:
0580453514,0580453500
0580453502,0580453508
SI DAT:
70514

APPLICATION

FIAT,CITROEN,PEUGEOT,OPEL

KS23B



CROSS REFERENCE

OE:
815012,90297154,
90322493
OPEL:
815012,90297154,
90297153
BOSCH:
0580453509
SI DAT:
70509

APPLICATION

VW.SEATAUDI.SKODA

KS24



CROSS REFERENCE

VDO:
E22041077
405058005017R
V.W:
1GD0919051B

APPLICATION

VW.SEATAUDI.SKODA

KS24B



CROSS REFERENCE

7L691908TA

APPLICATION

VW.AUDI

KS26B



CROSS REFERENCE

OE:
1450.59
AIRTEX:
E8260; E8308;E10009
BMW:
16121115862
PIERBURG:
72128753.0
BOSCH:
0580464038

APPLICATION

PEUGEOT, RENAULT,CITROEN, BMW

电动燃油泵 | ELECTRIC FUEL PUMP

KS26C



CROSS REFERENCE

AIRTEX:
E10009
AC DELCO:
EP227,EP280,EP284
BOSCH:
0580464070,0580464048

APPLICATION

PEUGEOT,RENAULT, BMW, OPEL, CITROEN,MG,SEAT, ALFA ROMEO

KS26D



CROSS REFERENCE

BOSCH:
0580464051,90323006,90349994
0580254935,0580464068

APPLICATION

PEUGEOT,RENAULT, OPEL, BMW

KS26E



CROSS REFERENCE

BOSCH:
0580464996,0580464997
FIAT,LANCIA:
5968085,7580215,60800164,60805158

APPLICATION

FIAT,LANCIA,ALFA

KS27



CROSS REFERENCE

AIRTEX : E10008,E8149,E8314
AC DELCO: EP229
BOSCH:
0020919701,0580254910
PIERBURG: 7.21659.72.0

APPLICATION

AUDI,VW,MERCEDES-BENZ, FERRARI

KS28



CROSS REFERENCE

AIRTEX:
E10002,E8177
BENZ:
0020915901,0020918801
PIERBURG:7.21565.71.0
BOSCH:
0580254911,0580254945,0580254946,
0580254950,0580254951,0580464030,
0580464034,0580464040,0580464068

APPLICATION

BENZ MERCEDES

KS28B



CROSS REFERENCE

AC DELCO:
EP217 EP225
KEN:
EFP7334
PIERBURG:
721565700
BOSCH:
0580464027 0580464044

APPLICATION

PEUGEOT,RENAULT

KS29



CROSS REFERENCE

FIAT:
60537611
JEEP:
8933063591
PEUGEOT:
145083 91539329
RENAULT:
7700739914
BOSCH:
0580453911

APPLICATION

PEUGEOT, JEEP,

KS30



CROSS REFERENCE

OE:
93286414,25341709,25347361

APPLICATION

CHEVROLET,PONTIAC,OLDSMOBILE

KS30B



CROSS REFERENCE

GM:
25186946,25363860

APPLICATION

GM,FORD

KS31



CROSS REFERENCE

AIRTEX:
E8214
AC DELCO:
EP440 EP457
OPEL:
815031,90541593,90571033,815019
90411794,7796614
BOSCH:
0580314097,0580453984,0580453966

APPLICATION

OPEL,BMW

KS32A



CROSS REFERENCE

AIRTEX:
E3533M

APPLICATION

CADILLAC

KS32B



CROSS REFERENCE

AIRTEX:
E3537M E3974M
GM:
0643402
DELPHI:
BCD00101

APPLICATION

CADILLAC

KS32C



CROSS REFERENCE

BOLERO

APPLICATION

KS34



CROSS REFERENCE

AIRTEX:
E8230,E8247,E8272
NISSAN:
17042-73Y00,17042-Q5601,
17042-96E00,17042-1E300,
17042-62C00,17042-71L02

APPLICATION

NISSAN

KS35



CROSS REFERENCE

AIRTEX:
E10241,E10241
BENZ:
001.470.31.94
PIERBURG:
7.21088.62.0

APPLICATION

VW,SEAT,MERCEDES-BENZ

KS35A



CROSS REFERENCE

AIRTEX :
E7359,E2008,E2035
AC DELCO:
EP297.EP303
CARTER:
P74067

APPLICATION

电动燃油泵 | ELECTRIC FUEL PUMP

KS35B



CROSS REFERENCE

AIRTEX : E3027AC
DELCO: EP24

APPLICATION

FORD

KS35C



CROSS REFERENCE

DELPHI:
FE2001-12B1
KEM:
EFP2003.EFP2035
AIRTEX:
E2003,E2036,E2485, E3903

APPLICATION

CHRYSLER

KS36



CROSS REFERENCE

AIRTEX:
E7063M
BOSCH:
0580464001
WALBRO:
TTP387

APPLICATION

CITROEN,PEUGEOT

KS36B



CROSS REFERENCE

TTP456, TTP476,96350078, 96494976

APPLICATION

DAEWOO LANCIA ,RENAULT

KS37



CROSS REFERENCE

AIRTEX:
E8146.E10256
AC DELCO:
EP428
BOSCH:
0580254909,0580254927,0580254931,
0580254932 0580254934,0580254949
DELPHI:
FE0147

APPLICATION

BMW, VOLVO, PEUGEOT, PORSCHE

KS38



CROSS REFERENCE

BOSCH:
0580254957,0580254961,0580254964,
0580254967
AIRTEX:
E10004,E8150,E8169E8171,E8305,
E8307
BENZ:
0020911301,A0020911301
PIERBURG:
7.21659.70.0

APPLICATION

BMW,PEUGEOT,VOLVO

KS40



CROSS REFERENCE

BMW:
1614.1.183.178
BOSCH:
0986580051

APPLICATION

BMW,AUDI

KS40B



CROSS REFERENCE

AIRTEX:
E8132
VDO:
405052003001,405052003002
V.W:
8A0906091A, 8A0906091G
PIERBURG:
7.18259.50.0
BOSCH:
0580453070,0580453071, 0580453081

APPLICATION

AUDI

KS41



CROSS REFERENCE

BOSCH:
0580254019,0580254031,0580254928,
0580254942,0580254943,0580254952
PIERBRUG:
7.21659.72.0

APPLICATION

AUDI,MERCEDES, VOLVO

KS41A



CROSS REFERENCE

BOSCH:
0580254044
FERRARI:
94650017
PORSCHE:
99362010480
HOFFER:
7506035

APPLICATION

AUDI

KS41B



CROSS REFERENCE

0580254044

APPLICATION

KS41C



CROSS REFERENCE

BOSCH:
0580254033
VW:
191906091H

APPLICATION

VW

KS45



CROSS REFERENCE

E2182

APPLICATION

FIAT

KS47



CROSS REFERENCE

510-12-815-1,510-12-802-1
510-712-802-1,510-12-806

APPLICATION

HOLLEY FUEL PUMP

KS47B



CROSS REFERENCE

404-501 HP

APPLICATION

FUEL PRESSURE ,REGULATORS

KS48



CROSS REFERENCE

OEM:
377919051AE,373919051
273919051,3547919051 AD
3259190511,32591905119
BOSCH:
0580454008,F000TE0120

APPLICATION

VW.FIAT

KS48A



CROSS REFERENCE

BOSCH:
0580454008

APPLICATION

GM,FORD

KS49



CROSS REFERENCE

OEM:
23220-75020,23221-75020,23221-50100

APPLICATION

KS50



CROSS REFERENCE

LADA

APPLICATION

KS51



CROSS REFERENCE

0986580354,0014706694
0986580354,0014701294

APPLICATION

BENZ MERCEDES

KS51B



CROSS REFERENCE

APPLICATION

KS52



BIG INLET

CROSS REFERENCE

0986580372,7.22156.50.0
7.21960.01.0,0004706094
0004706794

APPLICATION

BENZ MERCEDES

KS52B



CROSS REFERENCE

2641A203,MF4225449M1

APPLICATION

BENZ MERCEDES

KS53



CROSS REFERENCE

MERCEDES-BENZ:
0004704994,0004705494,0004706394
BOSCH:
0986580371

APPLICATION

BENZ MERCEDES

KS53B



CROSS REFERENCE

0004704994,0004705494

APPLICATION

MERCEDES BENZ

KS54



CROSS REFERENCE

DELPHI:
BCD00101
GM:
0.64.34.02

APPLICATION

GM

KS57



CROSS REFERENCE

23220-21132,23220-21131, 232200P010,
0502244,20502,
J1602063,7507312,PB-244,
05244,77312,70502, 38924,FP2193

APPLICATION

TOYOTA, SUZUKI

KS57B



CROSS REFERENCE

23220-0H071

APPLICATION

TOYOTA

KS58



CROSS REFERENCE

AIRTEX:
E2059M
AC DELCO:
EP489
WALBRO:
5CA246
DELPHI:
FE0199 P74104

APPLICATION

FORD GM MERCURY

KS58B



CROSS REFERENCE

FORD GM MERCURY

APPLICATION

KS59



DIAMETER: 38MM

CROSS REFERENCE

382101G.46798695

APPLICATION

FIAT

KS60



CROSS REFERENCE

0580464103,0580464073, 0580464086,
93828642, 500314007,31111-26900
31111-26930

APPLICATION

IVECO, V.W., RENAULT

KS60B



CROSS REFERENCE

580464075,0580464096,058045
6084, 0580464073,1S7U9350DA,
1S7U9A407DA,XS7U9350AA,
500314007

APPLICATION

IVECO;OPEL;FORD

KS60C



CROSS REFERENCE

APPLICATION

KS61



CROSS REFERENCE

31112-1A600

APPLICATION

CITROEN,PEUGEOT,FIAT

KS61B



CROSS REFERENCE

APPLICATION

AUDI

KS61D



CROSS REFERENCE

AIRTEX:
10257
BOSCH:
0580453021,0580314071
BMW:
16141180318,16147161387
PIERBURG:
7.21913.50.0,7.01913.000
7.21833.51.0

APPLICATION

BMW5

KS61E



CROSS REFERENCE

AIRTEX:
E 10256
BOSCH :
0580453053
BMW:
16141182842
PIERBURG:
7.22292.50.0

APPLICATION

BMW3

KS61F



CROSS REFERENCE

APPLICATION

KS61G



CROSS REFERENCE

BMW:
16141183178

APPLICATION

BMW

KS62



CROSS REFERENCE

BOSCH:
0580314,0580314076,0580453019
BMW:
1614179992

APPLICATION

BMW,OPEL

KS64



CROSS REFERENCE

PIERBURG:
7.21440.51.0,7-21440.53.0
VW:
021906091A
RENAULT:
6001008899, 7.21440.51.0
7.21440.53.0, 0453-13-350
021906091A, 6001008899
020910001, 0020918401
A0020910001, A0020910401

APPLICATION

LADA, V.W, RENAULT

KS64B



CROSS REFERENCE

PIERBURG:
7.21440.51.0,7-21440.53.0
VW:
021906091A
RENAULT:
6001008899, 7.21440.51.0
7.21440.53.0, 0453-13-350
021906091A, 6001008899
020910001, 0020918401
A0020910001, A0020910401

APPLICATION

LADA, V.W, RENAULT

KS64C



CROSS REFERENCE

PIERBURG:
7.21440.51.0,7-21440.53.0
VW:
021906091A
RENAULT:
6001008899, 7.21440.51.0
7.21440.53.0, 0453-13-350
021906091A, 6001008899
020910001, 0020918401
A0020910001, A0020910401

APPLICATION

LADA, V.W, RENAULT

KS65



CROSS REFERENCE

FIAT

DIAMETER: 43MM

APPLICATION

KS65B



CROSS REFERENCE

APPLICATION

KS65C



CROSS REFERENCE

FP434505C,430701A

APPLICATION

KS66



CROSS REFERENCE

13578997,8111834923

APPLICATION

电动燃油泵 | ELECTRIC FUEL PUMP

KS66B



CROSS REFERENCE

1358997

APPLICATION

KS75



CROSS REFERENCE

BCD81010129

APPLICATION

IVECO

KS87



CROSS REFERENCE

PIERBURG:
7.22782.50.0
BMW:
16146676383,16146757305
16144028194

APPLICATION

LAND ROVER,BMW,BENZ

KS88A



CROSS REFERENCE

Walbro F90000262,,Walbro F90000267,
GSS342

APPLICATION

MITSUBISHI,NISSAN, KIA

KS78



CROSS REFERENCE

AIRTEX:
E10372
BOSCH:
0986580129
PIERBURG:
7.22013.02.0
BMW:
16141183176,16141183216
16146752368
MERCEDES-BENZ:
A0004701794,0004701794

APPLICATION

BMW

KS78B



CROSS REFERENCE

BOSCH:
0986580130
AIRTEX:
E 10528
HOFFER:
7506982
PIERBURG:
7.22013.57.0,16116752626,16116755043
16116755044,16116768357

APPLICATION

BMW X5

KS88B



CROSS REFERENCE

Walbro GSS340

APPLICATION

BMW , VOLVO , DODGE ,CHRYSLER

KS88C



CROSS REFERENCE

F20000169 ; 400-1016

APPLICATION

CHEVROLET, PONTIAC ,LAND ROVER ,
CADILLAC ,

KS83



CROSS REFERENCE

1K0919050B.1 K0919050D,
1C0919050B.3C0919050B,
3C0919050.3C0919050AA
AIRTEX:
E10611

APPLICATION

AUDI,VW,SEAT

KS84



CROSS REFERENCE

993762137,993762120,993762094,
993762258,2K0919050A.2K0919050A,
993-762-094,E22-041-096Z,
220-212-010-002Z, 993-762-094Z.
3B0919050B,1T0 919050,2K0919050A,
228235012001 Z.2K0919050A,
0986596031

APPLICATION

VW

KS102



CROSS REFERENCE

23220-28090,23220-21211
23220-0M050,23220-0V130

APPLICATION

TOYOTA VIOS/PRIUS,2ZRFXE ZVW30

KS102B



CROSS REFERENCE

23220-21211,67.1139

APPLICATION

TOYOTA

KS85



CROSS REFERENCE

993784007,16141184165,
16141184276,16146752499,
16146766942
VDO:
228222009002Z,16146766942

APPLICATION

BMW,AUDI

KS86



CROSS REFERENCE

BMW:
16141182887
VDO:
228222005004

APPLICATION

BMW

KS102C



CROSS REFERENCE

23221-22040,23220-75240
23100-BZ200,23220-0C081

APPLICATION

KS103



CROSS REFERENCE

31111-1R000,31111-09000

APPLICATION

电动燃油泵 | ELECTRIC FUEL PUMP

KS103C



CROSS REFERENCE

31119-C9000

APPLICATION

KS104



CROSS REFERENCE

BOSCH:
722013030/733013040

APPLICATION

VW/BMW

KS105



CROSS REFERENCE

MERCEDES:
A Klass (W168) 140 1997-2004
A Klass (W168) 160 1997-2004
A Klass (W168) 190 1999-2004
A Klass (W168) 210 2001-2002
VITO 113 2.0 1995->
VITO 114 2.0 1995->
VITO 114 2.3 1995->
7.22810.50.0
1684702894

APPLICATION

MERCEDES BENZ

KS106



CROSS REFERENCE

0580453021; 16141181354;16141181354;
16141180318;16147161387;16141178119;
16141179119;TB16141178839;
0580453040;FP0063;405052005001Z;
405-052-005-001;0580314071;
7.21913.00.0;7.21651.60.0
721913000:721651600

APPLICATION

(E34)520i 24V 1989-1995
ESTATE(34)518G 1995-1996
BMW 5 Series [1988-1997]

KS107



CROSS REFERENCE

UC-T30

APPLICATION

MOTORCYCLE CAR

KS118



CROSS REFERENCE

170409AB0A

APPLICATION

KS137



CROSS REFERENCE

TATA ACE SUPER

APPLICATION

KS147



CROSS REFERENCE

GSL392,GSL395

APPLICATION

KS147B



CROSS REFERENCE

GSL392,GSL395

APPLICATION

FORD, JEE, POPEL

KSJ01



CROSS REFERENCE

PARKING HEATER PUMP

APPLICATION

KE2000



CROSS REFERENCE

AIRTEX:
E2000
ACDELCO:
EP286

APPLICATION

FORD,LINCOLN,MERCURY

KE2001
KE2002



CROSS REFERENCE

MFG:
EP310,EP314,EP361,EP369,EP438
ARITEX:
E2001
CARTER:
P74123
AC DELCO:
EP314IEP346,EP361
WALBRO:
526,5CA212,5CA226,WEP212,WEP226
WEP522,WEP526

APPLICATION

LINCOLN,FORD,MERCURY

KE2042



CROSS REFERENCE

MFG:
EP274,EP287,EP346,EP361.EP374
AIRTEX:
E2042
CARTER:
P74095
WALBRO:
5CA202,5CA210,5CA215,WEP202,
WEP210,WEP215,WEP526

APPLICATION

FORD,MERCURY

KE2044



CROSS REFERENCE

MFG:
P353,EP356,EP369,EP395, EP397,
EP417,EP418,Ep436
AIRTEX:
E2044
CARTER:
P74125

APPLICATION

FORD, MERCURY, LINCOLN

KE2061



CROSS REFERENCE

AIRTEX:
E2065.E2001
ALFA ROMEO:
46831949, 7750715
FLAT:
7750715,7742416
FORD:
F23Z-9A407A(99'P300)
F4389A407A.E83Z9H307B
PEUGEOT:
MSS076,1455.05

APPLICATION

FORD MERCURY,ALFAROMEO

KE2186



CROSS REFERENCE

E2182

APPLICATION

FORD,LINCOLN,MERCURY

KS70



CROSS REFERENCE

BOSCH:
17040-JE20D

APPLICATION

KS71A



CROSS REFERENCE

BOSCH:
23220-31130
291200-1001

APPLICATION

TOYOTA

KS71B



CROSS REFERENCE

BOSCH:
23221-31130
91200-1001

APPLICATION

TOYOTA

KS102D



CROSS REFERENCE

APPLICATION

KS165



CROSS REFERENCE

BOSCH:
31111-3T000

APPLICATION

KS170



CROSS REFERENCE

BOSCH:
31119-C9000

APPLICATION

KE2236



CROSS REFERENCE

AIRTEX:
E2236

APPLICATION

FORD

KE3290



CROSS REFERENCE

MFG: EP339.EP366
ARITEX: E3290
CARTER: P74128
GM: 25161821
BOSCH: 0986596031
F000JE1.734

APPLICATION

BUICK

KE7006



CROSS REFERENCE

E7006

APPLICATION

JEEP

摩托车燃油泵 | MOTORCYCLE FUEL PUMP

KS72



CROSS REFERENCE

1100-01090

APPLICATION

YAMAHA, MOTORCYCLE
WR250X.ZIF125

KS90



CROSS REFERENCE

APPLICATION

TATA,NANO

KS99



CROSS REFERENCE

BOSCH:
16700-K0Y-D01
Electrical motorcycle
fuel pump

APPLICATION

TOYOTA;HONDA;YAMAHA

KS100



CROSS REFERENCE

Electrical motorcycle
fuel pump

APPLICATION

TOYOTA;HONDA;YAMAHA

KS93



CROSS REFERENCE

UC-T35,Electrical motorcycle
fuel pump

APPLICATION

TOYOTA;HONDA;YAMAHA

KS94



CROSS REFERENCE

Electrical motorcycle
fuel pump

APPLICATION

TOYOTA;HONDA;YAMAHA

KS101



CROSS REFERENCE

APPLICATION

DIESEL FILTER SOLENOID VALVE

KS157



CROSS REFERENCE

APPLICATION

KS95



CROSS REFERENCE

APPLICATION

TATA NANO AEESMBLY

KS96



CROSS REFERENCE

Electrical motorcycle
fuel pump

APPLICATION

TOYOTA;HONDA;YAMAHA

KS157B



CROSS REFERENCE

APPLICATION

KS158



CROSS REFERENCE

FY-YMT
FY125
A828HT
JH-A828HT

APPLICATION

KS97



CROSS REFERENCE

Electrical motorcycle
fuel pump

APPLICATION

TOYOTA;HONDA;YAMAHA

KS98



CROSS REFERENCE

Electrical motorcycle
fuel pump

APPLICATION

TOYOTA;HONDA;YAMAHA

KS167



CROSS REFERENCE

BOSCH:
1SH-E3907-10

APPLICATION

YAMAHA BWS 125 FI/FINO/N-MAX
V1/CONNECTED/R15

KS169



CROSS REFERENCE

BOSCH:
AM28331250

APPLICATION

KWID

电动刹车真空泵 | ELECTRIC BRAKE VACUUM PUMP

IATF 16949

KW01

CROSS REFERENCE

HEP-02A



APPLICATION

KW02

CROSS REFERENCE

EP015



APPLICATION

KW03

CROSS REFERENCE

EP-500-0



APPLICATION

KW04

CROSS REFERENCE

方泵 EP2S9



APPLICATION

KW05

CROSS REFERENCE

UC-V6B



APPLICATION

KW06

CROSS REFERENCE

E8012S



APPLICATION

KW07

CROSS REFERENCE



APPLICATION

KW08

CROSS REFERENCE

E8012M-2



APPLICATION

ZKB01(UP28)

CROSS REFERENCE

20804130:31317530,009428081
20939309



APPLICATION

CADILLAC,CHEVROLET, VOLVO,CHRYSLER

ZKB01B

CROSS REFERENCE

20804130:31317530,009428081



APPLICATION

CADILLAC, CHEVROLET, VOLVO, CHRYSLER

ZKB04(UP32)

CROSS REFERENCE



APPLICATION

CADILLAC,CHEVROLET, VOLVO, CHRYSLER

ZKB05 oe (UP5X)

CROSS REFERENCE



APPLICATION

APPLICATION:

- ★ ELECTRIC CAR
- ★ TURBO CAR
- ★ HYBRID OWER VEHICLE
- ★ CAR WITH AUTOMATIC START-STOP FUNCTION

GLOBAL NETWORK 全球市场

在国外市场，电动柴油泵的应用已相当普及。而在国内，随着环保排放标准的不断提升，高压泵的压力要求越来越高，但其吸力相对较弱。因此，科申电动柴油泵以其强大的吸力成为保证油路畅通、减少冷启动故障的理想选择。

In foreign markets, the application of electric diesel pumps has been quite popular. And in China, with the continuous improvement of environmental emission standards, the pressure requirement of high-pressure pumps is getting higher and higher, but their suction power is relatively weak. Therefore, KESHEN electric diesel pump with its strong suction power has become the ideal choice to ensure the smooth flow of oil circuit and reduce the cold start failure.





主机配套客户
CUSTOMERS OF MAIN ENGINE

- 玉柴 Yuchai
- 一拖 YTO
- 新柴 Xinchai
- 莱动 Laidong





AMERICA
Argentina
Bolivia
Brazil
Canada
Colombia
Costa Rica
Dominica
Ecuador
Guatemala
Haiti
Jamaica
Mexico
Nicaragua
Panama
Paraguay
Peru
Puerto Rico
Trinidad and Tobago
United States
Venezuela
...

EUROPE
Austria
Belarus
Belgium
Bulgaria
Czech
Denmark
Finland
France
Germany
Greece
Hungary
Ireland
Italy
Netherlands
Norway
Poland
Romania
Portugal
Russia
Slovakia
Spain
Sweden
United Kingdom
...

Keshen

AFRICA
Angola
Benin
Botswana
Cameroon
Cote d'Ivoire
Egypt
Ghana
Kenya
Madagascar
Mozambique
Nigeria
South Africa
Sudan
Zambia
...

ASIA
Bangladesh
India
Indonesia
Iraq
Jordan
Kazakhstan
Kyrgyzstan
Malaysia
Mongolia
Myanmar
Pakistan
Philippines
Saudi Arabia
Sri Lanka
Syria
Thailand
Turkey
Turkmenistan
United Arab Emirates
Uzbekistan
Vietnam
China
...

OCEANIA
Australia
New Zealand

滤网 /FILTER

PS001 	PS002 	PS003 	PS004 
PS005	PS006 	PS007 	PS008 
PS009 	PS010	PS011 	PS012
PS013 	PS014 	PS015 	PS016 
PS018 	PS019 	PS020 	PS021 

PS022 	PS023 	PS024 	PS025 
PS026 	PS027 	PS028 	PS029 
PS030 	PS031 	PS032 	PS033 
PS034	PS035	PS036 	PS037 
PS038 	PS039 	PS040 	PS041

PS042 	PS043 	PS044 	PS045 
PS046 	PS047 	PS048 	PS049 
PS050 	PS051 	PS052 	PS053 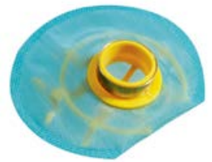
PS054 	PS055 	PS056 	PS057
PS058	PS059 	PS060	PS061 

PS062 	PS063	PS064 	PS065 
PS066 	PS067 	PS068	PS069 
PS070 	PS071 	PS072 	PS073 
PS074 	PS075 	PS076 	PS077 
PS078 	PS079 	PS080 	PS081 